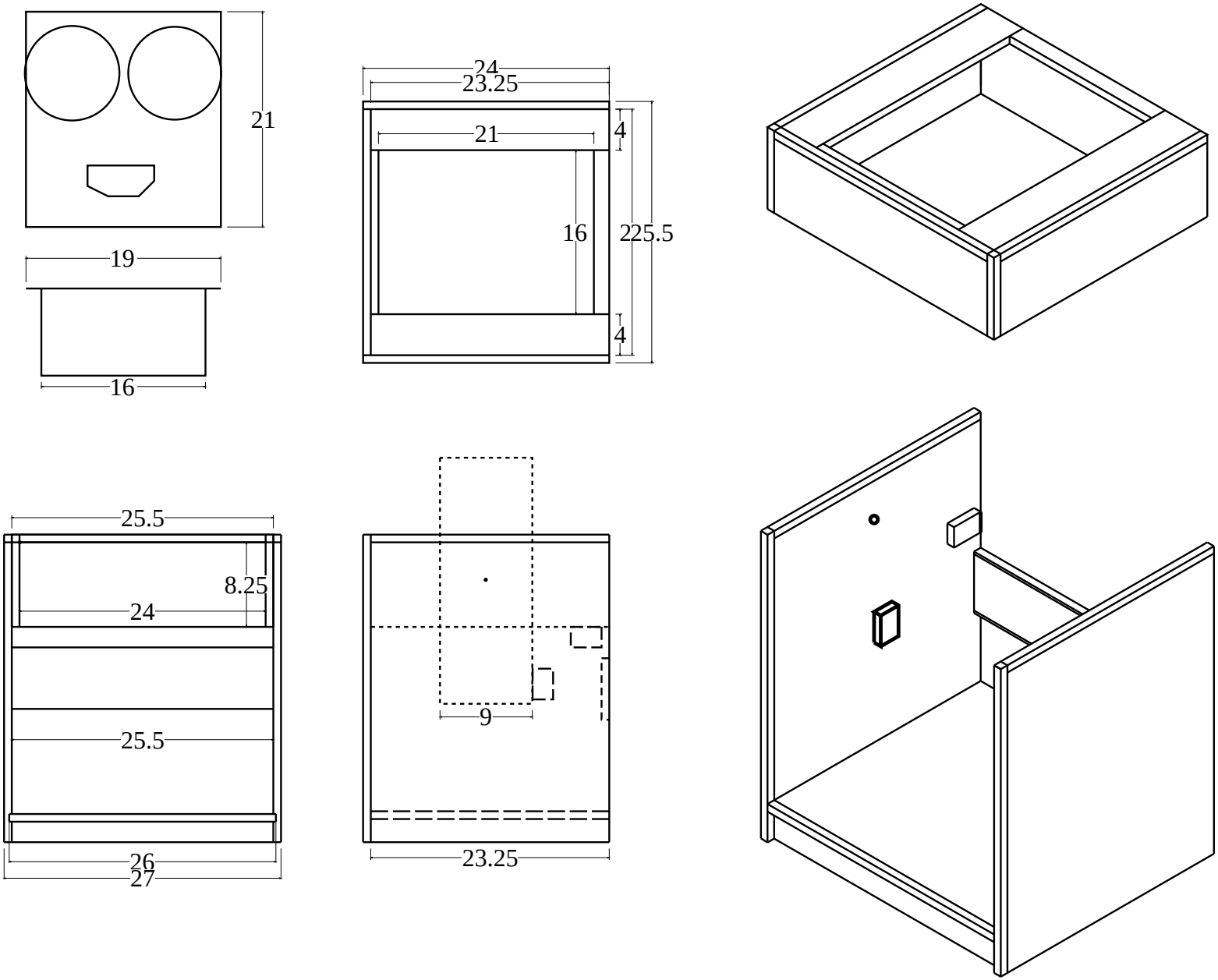
21
19
16
24
23.25
21
4
16
225.5
4
25.5
8.25
24
30
25.5
26
27
9
23.25